gearheads gazette

FRC TEAM 1189 EST. 2002

WEBSITE | YouTube | Facebook | Instagram | Twitter

GAME

By Maverick

FIRST (For Inspiration and Recognition of Science and Technology) Robotics is an organization that is dedicated to bringing engineering opportunities to students, elementary through high school; before they step into the halls of whatever college they choose to attend. Not only is this an organization that puts an emphasis on science, technology, engineering, and math; but it also places an incredibly strong emphasis on teamwork, sportsmanship, cooperation, and gracious professionalism.

FIRST announces a game every year on the first Saturday of January in a broadcast. It is filled with tips, interviews, game hints, as well as an animation of the general game play/rules of the game. Teams worldwide then have 6 weeks to design and program a robot that is able to play the game. Once those 6 weeks are up, teams travel to compete in different competitions around the world.

This year's game is called FIRST Steamworks. Robots must pick up wiffle balls known as "fuel' or gears and take them to the boiler or to the aircraft. Two alliances, made up of three teams each, compete simultaneously to score points by taking gears to the aircraft or by creating "steam" by getting "fuel" into the boiler. Teams get additional points if they get all the gears onto the aircraft or by generating enough "steam."

FULL STEAM AHEAD!

By Hannah O'Grady

As we start to really get into the meat of the build season here, we are back with another Gazette update on team progress! There is some fascinating stuff going down in all of our guilds right now, from prototyping to writing this edition of the Gearheads Gazette! Read more to learn about our current progress.

First up we have the build team. This team is really at the heart of it right now in this early part of the season. They jumped right in and are hard at work assembling the robot chassis,; actually two chassis. Top priorities for build right now are their prototypes for the climbing mechanism and the gear carrier. When asked for more information on the progress of these mechanisms build captain Josh Rigotti told this reporter that their design is still very much a work in progress, so not much to report on that right now.

Next up in our update is controls. Whilst most of the controls team is hard at work learning programing with one of our alumni, another group was working on the programming for our new and improved drive train! When asked what their code did they said they were currently focused on controlling the Mecanum drive to help the robot go in the direction we want it to. They were very focused!

Soon, I encountered the design team in their natural habitat. The design team is working on designs for the gear receiver and carrier. Also they are working on shooting mechanism ideas. All too soon, it was time to end my venture into the magical land of design, however as I was leaving this strange and wonderful land I encountered two rouge media members who were no doubt on their way to valiantly assist the design team in their endeavours.

I then ventured into the machine shop to learn about our fabulous fabrication team and their valiant efforts. Upon my inquiries I soon learned that fabrication was working on many things. Including fabricating the chassis, parts for the shooter, and parts for the gear delivery prototype. However, whilst I was there I observed only deburring and lathe work. It therefore follows that the mentioned items were in progress, however work was not being done on them whilwe I was there. All too soon it was time to depart and continue on my journey.

Soon I approached the wonderful warren which is houses our media team. The warmth and happiness of this place flowed over me as I entered and I knew that I was home. I approached the Duchess of this wonderful land for an update on the goings on and I discovered that they were working on the back of our t-shirts, they were getting work done on the FedEx challenge, they were taking stock of our swag, working on our standard and writing more articles for this wonderful gazette you see before you. Unfortunately, my journey had to end eventually and this update marked the last step in my voyage, so until we meet again I must bid you farewell.

NEW FACULTY MENTOR

Faculty Mentor, Jason Wolfsen is an Autism Spectrum Disorder Teacher at Grosse Pointe North High School, working with students ages 16-26 years of age. He is a family oriented professional who is passionate about helping others and working with kids. If he could have a super power he would like to be able know what people are thinking to better assist them. He joins the Gearheads this year with the aim to help the team reach their full potential as a unit and individuals.

What do Gearheads think?

We asked the a few Gearheads what they thought of this years game concept. Here is what they said.

Claudia Dancy
Senior, Build, Fab, Drive

"I think it's gonna be an interesting game. They've definitely managed to live up to First Stronghold."

"I like the steampunk theme, it's really cool. It does seem a little more challenging than last year."

Trinity Diehlee
Sophomore, Fab

A Flying GAME!?!? Not quite...

Ben Uznis

Last week at kickoff, we learned that this year's game is FIRST Steamworks, a game where robot alliances compete to make a machine "fly" by collecting various objects from around the field. Before the kickoff on January 7th, there were many predictions about what the game might be; which ones were right which ones were completely wrong? Well let's find out.

The teaser made it clear that the game would involve flying in some way, as such, most of the predictions involved how this would be implemented. For instance one prediction was that there would be a neutral object flying around the field that when "shot at" by the robot, would send a signal that would cause it to aid the team that hit it until shot at by an opposing team. Another Gearhead predicted that the end of the game would involve the robots climbing or hanging to simulate flying. Yet another Gearhead thought that it would involve a ball flying through the field like some sort of miniature blimp. However, know one seems to have guessed that in actuality, the game involves preparing a structure on the field for flight (although it doesn't literally fly, only figuratively).

While many of the predictions focused on the flying aspects of the game there were still others; such as the object of the game being to build a wall as well as a game that actually uses steam (get it? STEAMpunk) but for the most part the predictions focused on the use of flying so there aren't many of these to talk about.

But what about the predictions that were right? For starters there were people who correctly guessed the focus on different forms of fuel and reusing resources. There were also people who accurately predicted the presence of a large object in the middle of the field, and of course, it does involve flying.

In conclusion, with a large focus on the flight aspects of the game teaser, there wasn't so much accuracy on how the flight theme would be integrated with the game. Many of the flight related predictions were pretty for off from the final game concept. However, the non-flight related themes of the predictions did land kind of close to the mark.

design

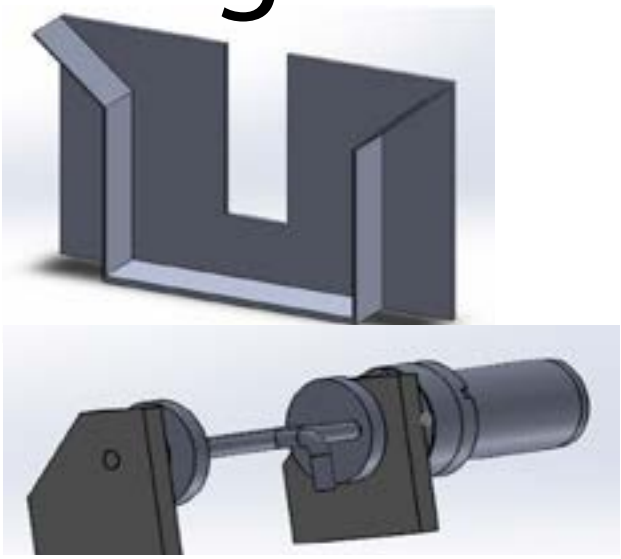

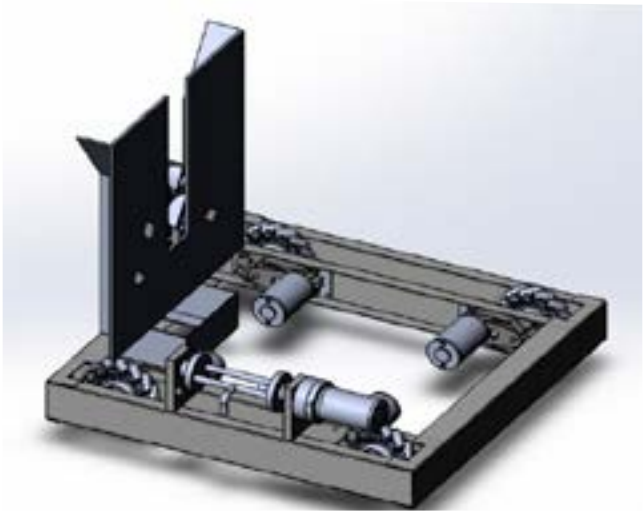

Design is currently working with CAD software Solidworks to create prototypes for the FIRST Steamworks competition. As for right now, we have a model for the chassis, a gear intake, and a rope intake. We are currently working on a bucket for the fuel & a launcher for it as well. This way, we have proper measurements for all the parts. The gear intake will rely on the player station to be loaded along with the bucket for the fuel. The rope intake will wrap the rope around it & pull itself up it.

Member of the team also, took the oppurtunity the day before kckoff to visit a nearby Virtual Reality lab. Where they had the chance to use cutting edge Computer Generated Virtual Reality to visit the human body, go to outer space, and explore automotive manufacturing. Shortly after the game reveal and kickoff, they used that same virtual reality technology to visit the Steamworks game field in VR also.

HOW CAN YOU HELP US GET GEARED UP?

The Gearheads couldn't get where we have without the support of our Community, Friends, Family, and Sponsors. There are plenty of ways to pitch in.

If you shop at Kroger, you can help just by registering your Kroger rewards with our team. Head over to www.Kroger.com/communityrewards. Sign up or log in to support the Grosse Pointe Robotics Club (Organization #84873). Don't worry, the fuel rewards and savings are all your, Kroger merely knows that the Gearheads are an organization that they whould donate local funds toward.

Another way to help is to buy or lease your next car from Matt Frame at Ray Laethem, the Dealership will donate $100 to the Gearheads for every new vehicle purshased or leased. Just contact Matt Frame and mention the Gearheads when making the purchase or lease.

Or visit the Grosse Pointe Foundation for Public Education and donate directly to the team via PayPal.